Multifunctional Switches
Multi Way Switches, JXS Ⅲ Series

■ Features

1. Low profile of 2.3mm height.
2. Sharp index feedback is ensured by the metal contact structure employed.
3. Externally measures 10.0mm(W) × 10.0mm(D) × 2.3mm(H).
4. 4 way and center push operation are possible.
5. Available in 2 version of discrete and SMD type.

■ Specification

1. Rating	: 20mA, 12V DC
2. Contact Resistance	: 200mΩ max.
3. Insulation Resistance	: 100MΩ min.
4. Withstanding Voltage	: 100V AC (for one minute)
5. Operating Force	: Rotation direction Push direction 3±1.5N
6. Operating Angle	: $4^{+3^\circ}_{-2^\circ}$
7. Push Stroke	: $0.2^{+0.2}_{-0.1}$ mm
8. Operating Life	: 50,000 cycles
9. Operating Temperature Range	: –25°C to +70°C

■ Application

Automotives, motorcycles, car audios, PCs, PC peripherals, TVs, DVD players, industrial equipment, business equipment, home appliance and healthcare products.

JXS0000-05□1

(With Center Push)

500 pcs/reel

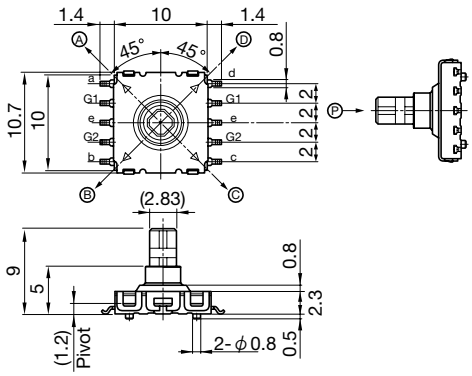

Operating Force (Rotation Direction) : 1.2±0.6N

Circuit

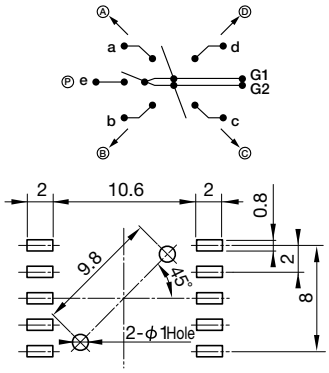

P. C. Board Dimension

□	Part No.
0	Product Part No.
1	Embossed Taping Packing Part No.

*Delivery will be made on embossed taping.